2 TOYOTA CENTURY

(Cont. next page)

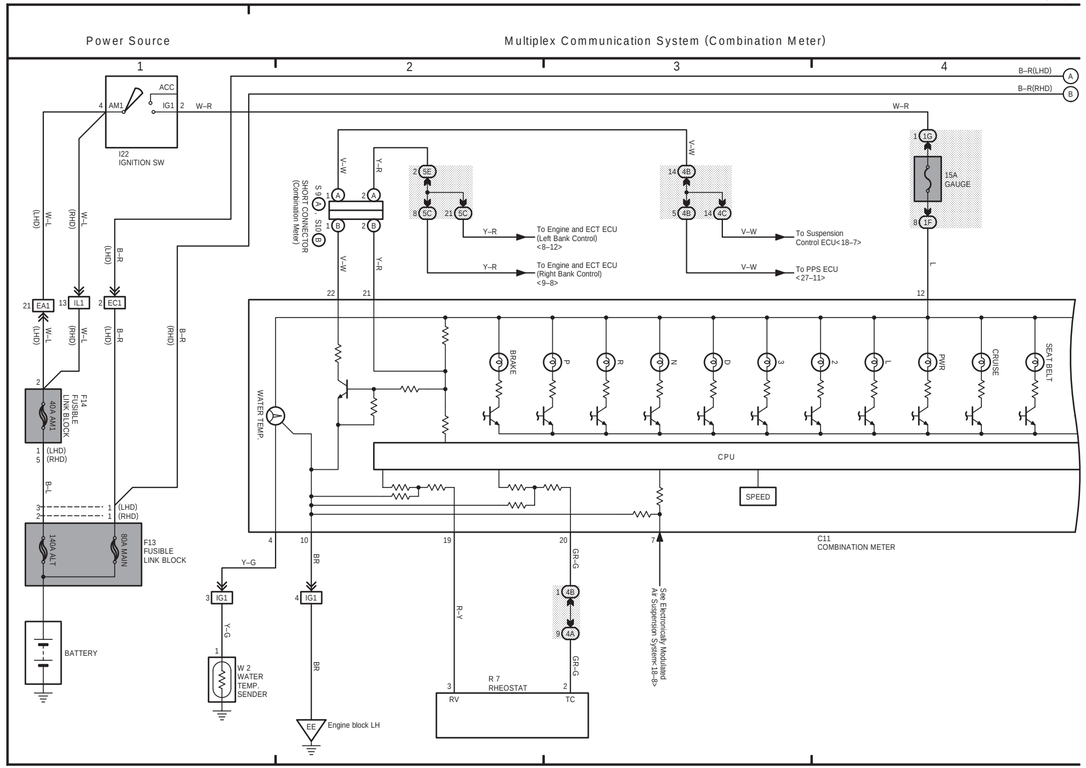
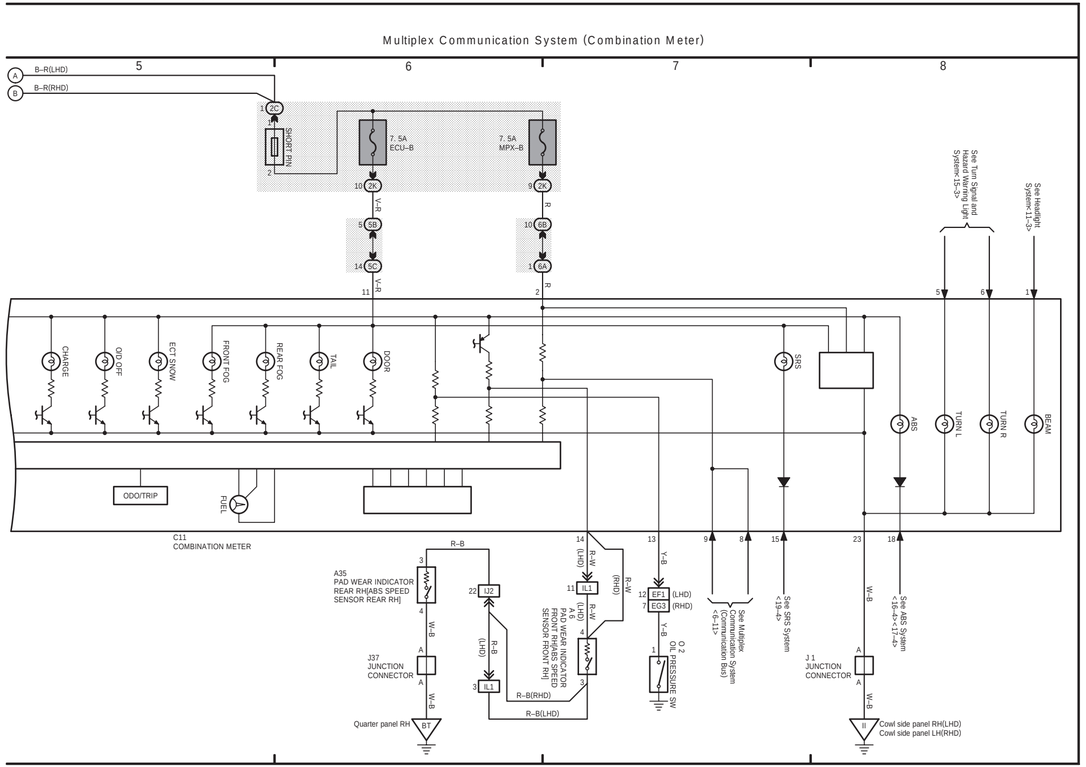
2 TOYOTA CENTURY (Cont' d)