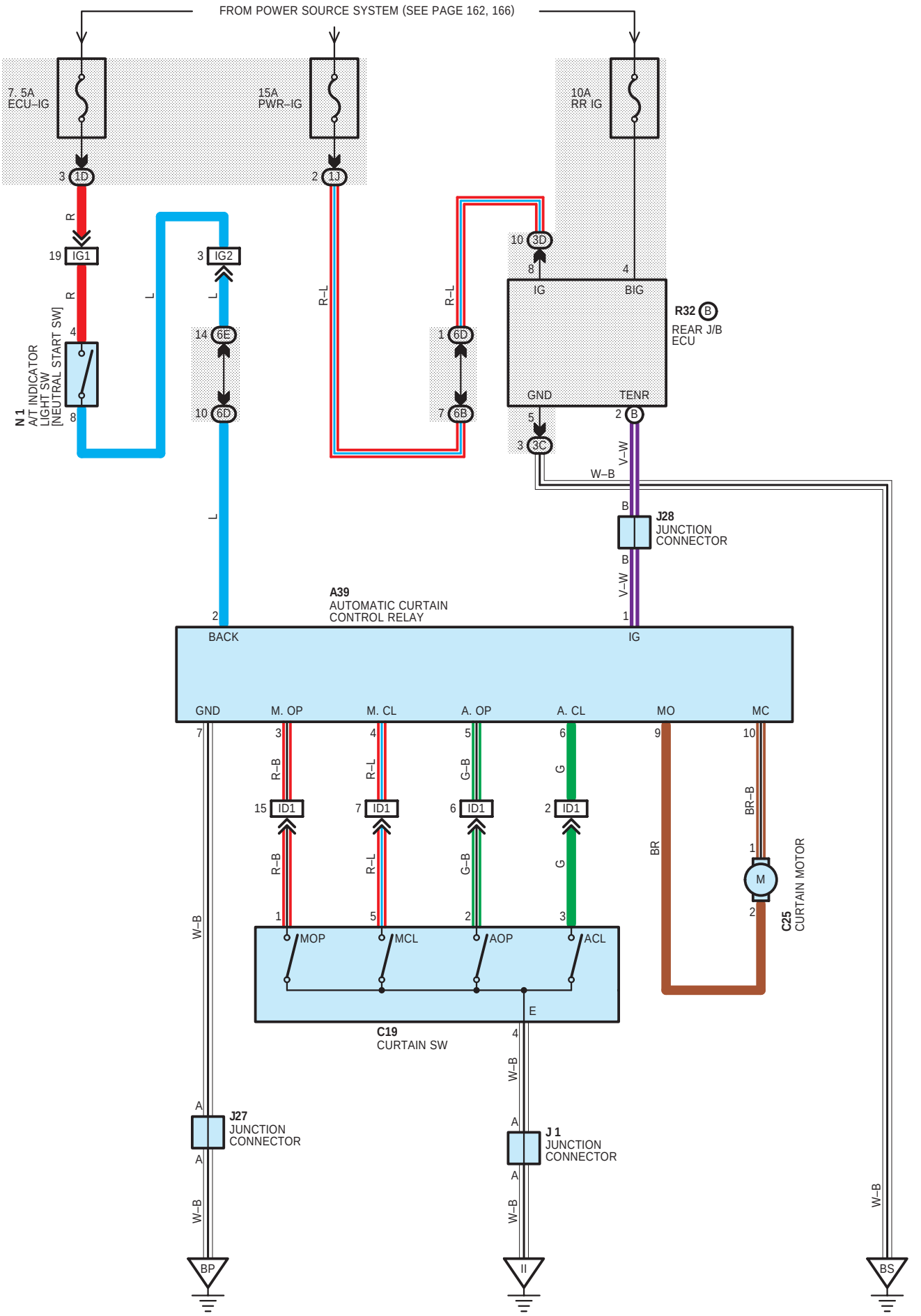REMOTE CONTROL CURTAIN