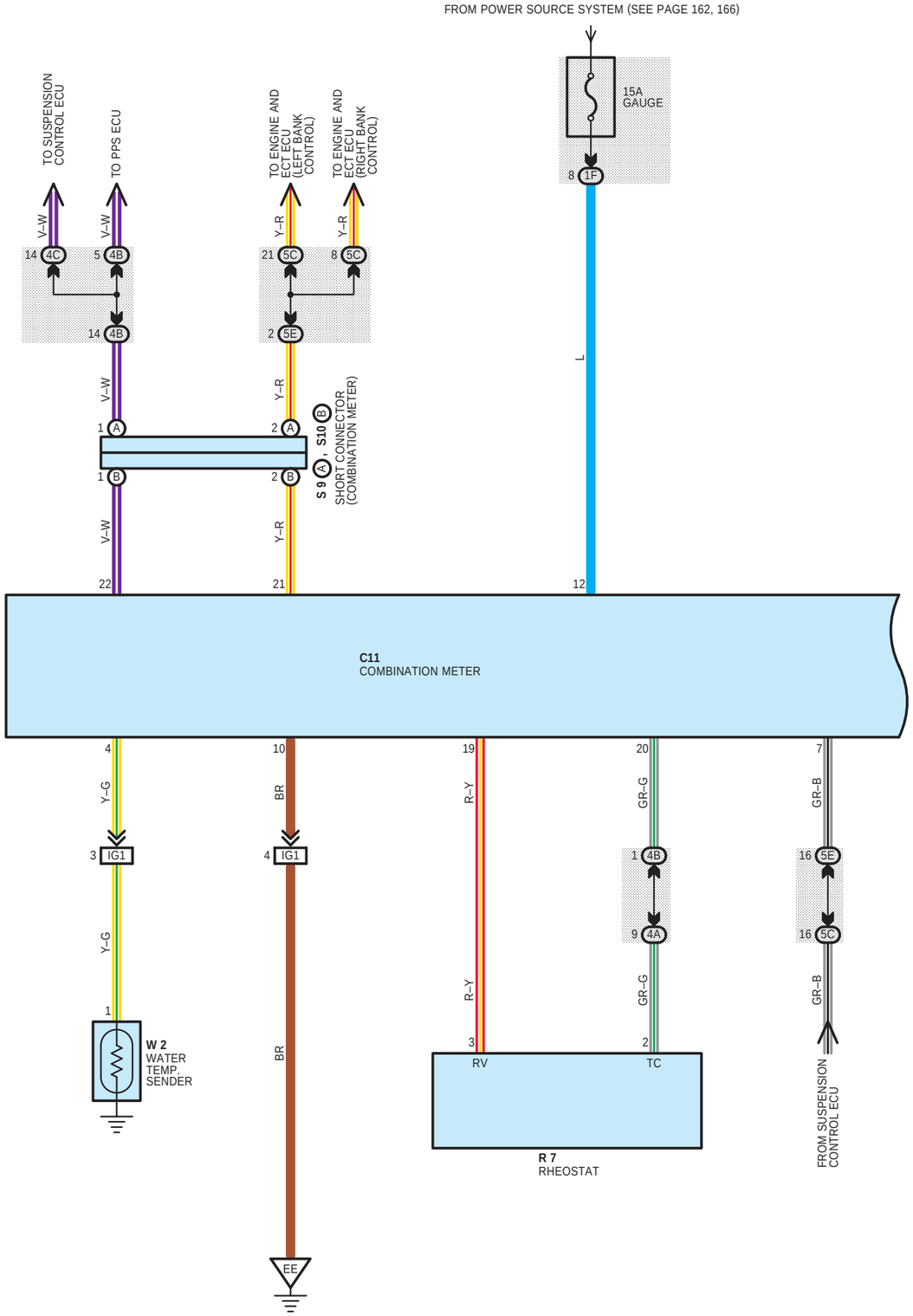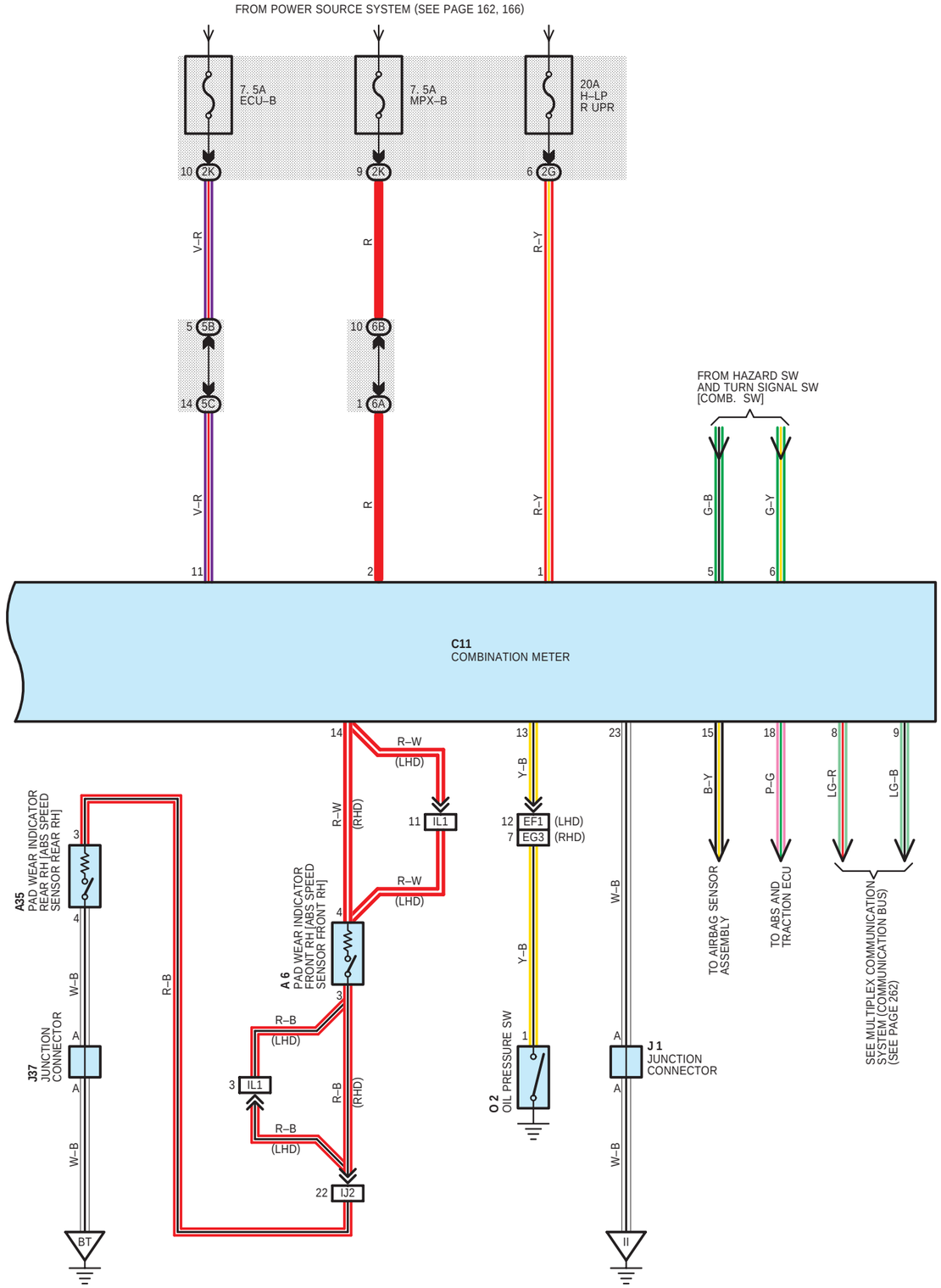MULTIPLEX COMMUNICATION SYSTEM (COMBINATION METER)