FLOOR SHIFT ASSEMBLY

COMPONENTS

AT0GW–01

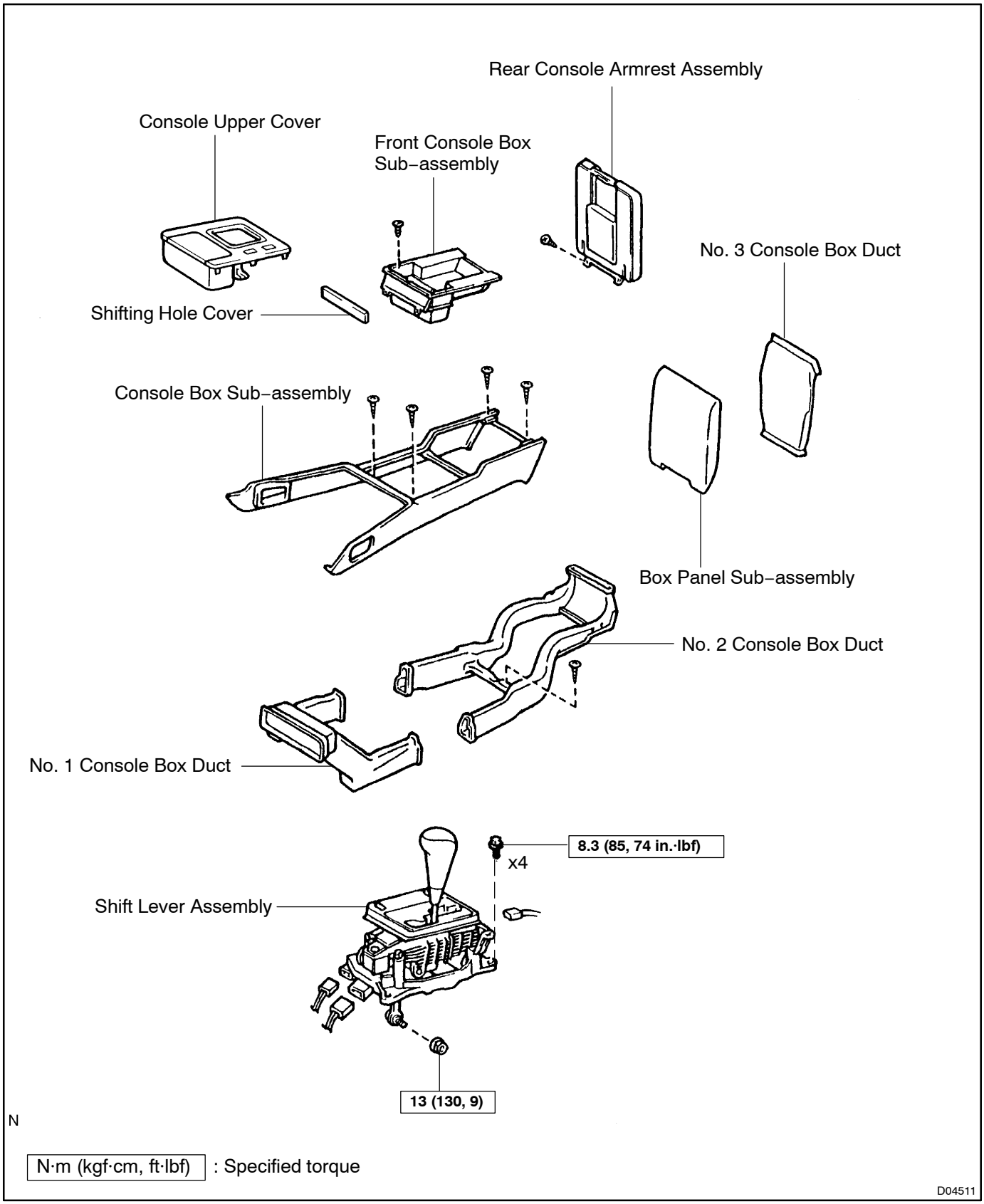

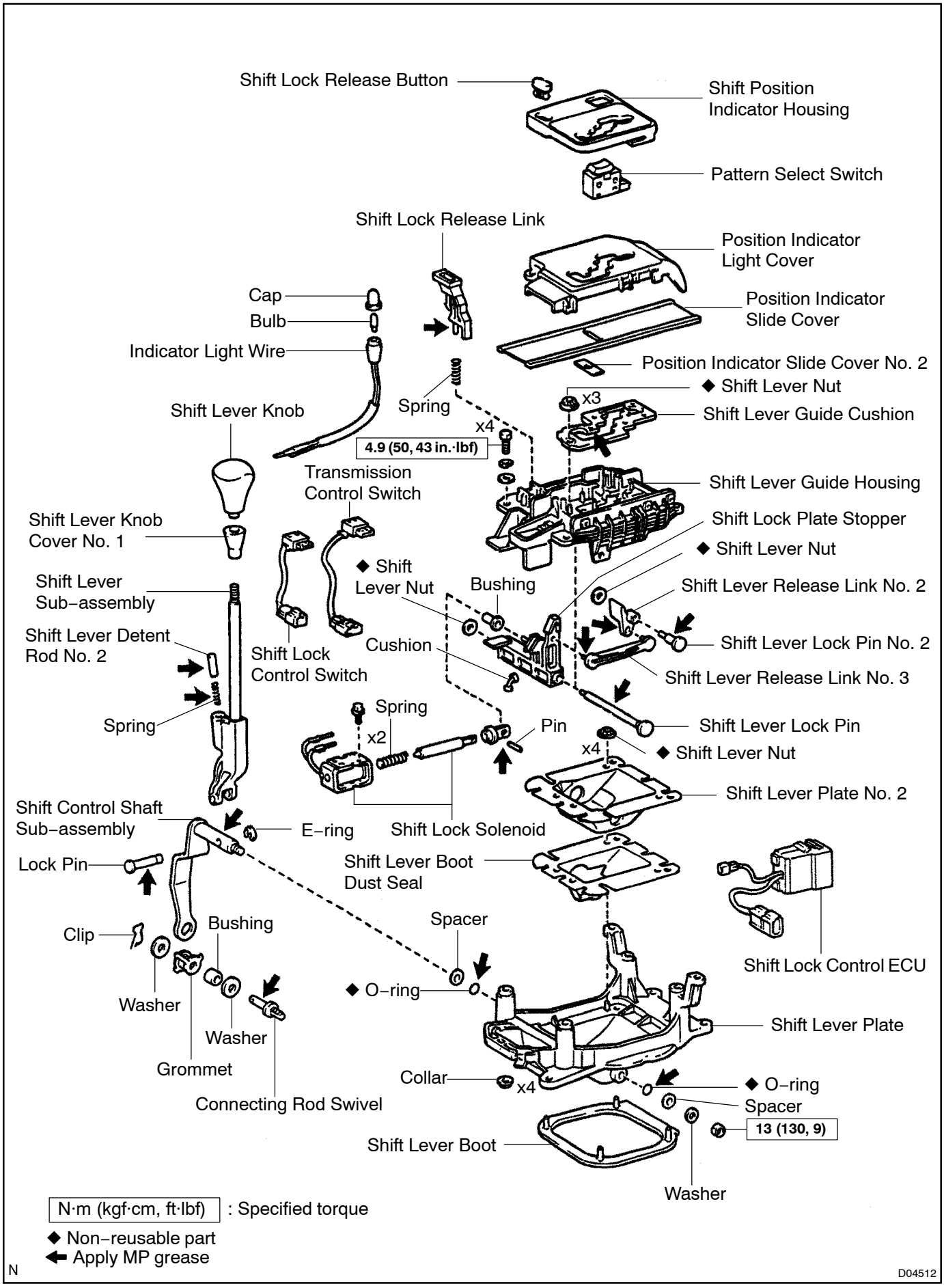
Shift Lock Release Button
Shift Position Indicator Housing
Pattern Select Switch
Shift Lock Release Link
Position Indicator Light Cover
Cap
Bulb
Position Indicator Slide Cover
Indicator Light Wire
Position Indicator Slide Cover No. 2
◆ Shift Lever Nut
x3
Spring
Shift Lever Knob
Shift Lever Guide Cushion
x4
4.9 (50, 43 in.·lbf)
Transmission Control Switch
Shift Lever Guide Housing
Shift Lever Knob Cover No. 1
Shift Lock Plate Stopper
◆ Shift Lever Nut
◆ Shift Lever Nut
Bushing
Shift Lever Release Link No. 2
Shift Lever Sub–assembly
Shift Lever Detent Rod No. 2
Shift Lever Lock Pin No. 2
Cushion
Shift Lock Control Switch
Shift Lever Release Link No. 3
Spring
Spring
Pin
Shift Lever Lock Pin
x2
x4
◆ Shift Lever Nut
Shift Lever Plate No. 2
Shift Control Shaft Sub–assembly
E–ring
Shift Lock Solenoid
Lock Pin
Shift Lever Boot Dust Seal
Clip
Bushing
Spacer
Shift Lock Control ECU
Washer
◆ O–ring
Shift Lever Plate
Washer
Grommet
Collar
x4
◆ O–ring
Connecting Rod Swivel
Spacer
13 (130, 9)
Shift Lever Boot
Washer
N·m (kgf·cm, ft·lbf) : Specified torque
◆ Non–reusable part
Apply MP grease
N
D04512