REAR SEAT

COMPONENTS

BO2AG–01

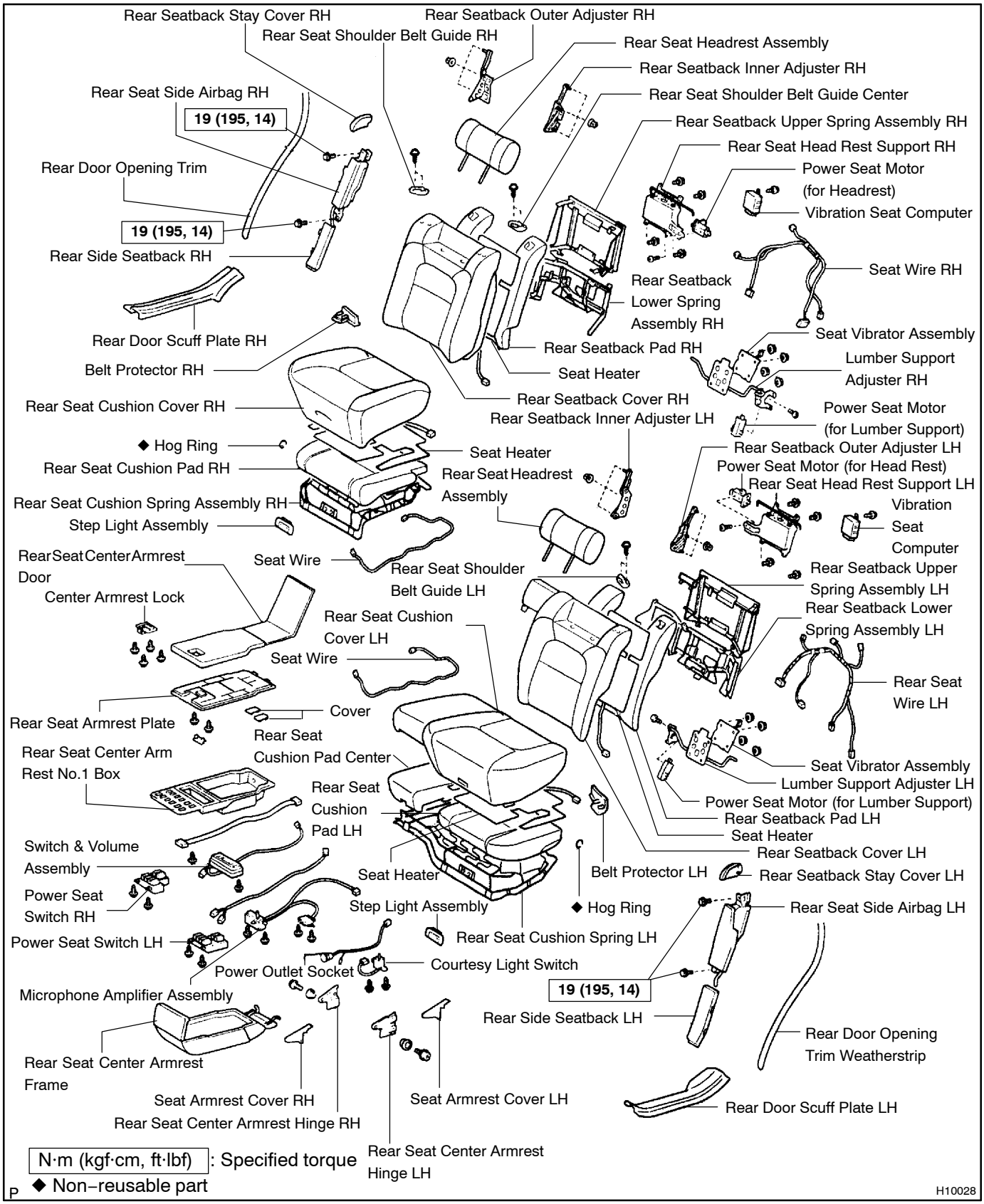

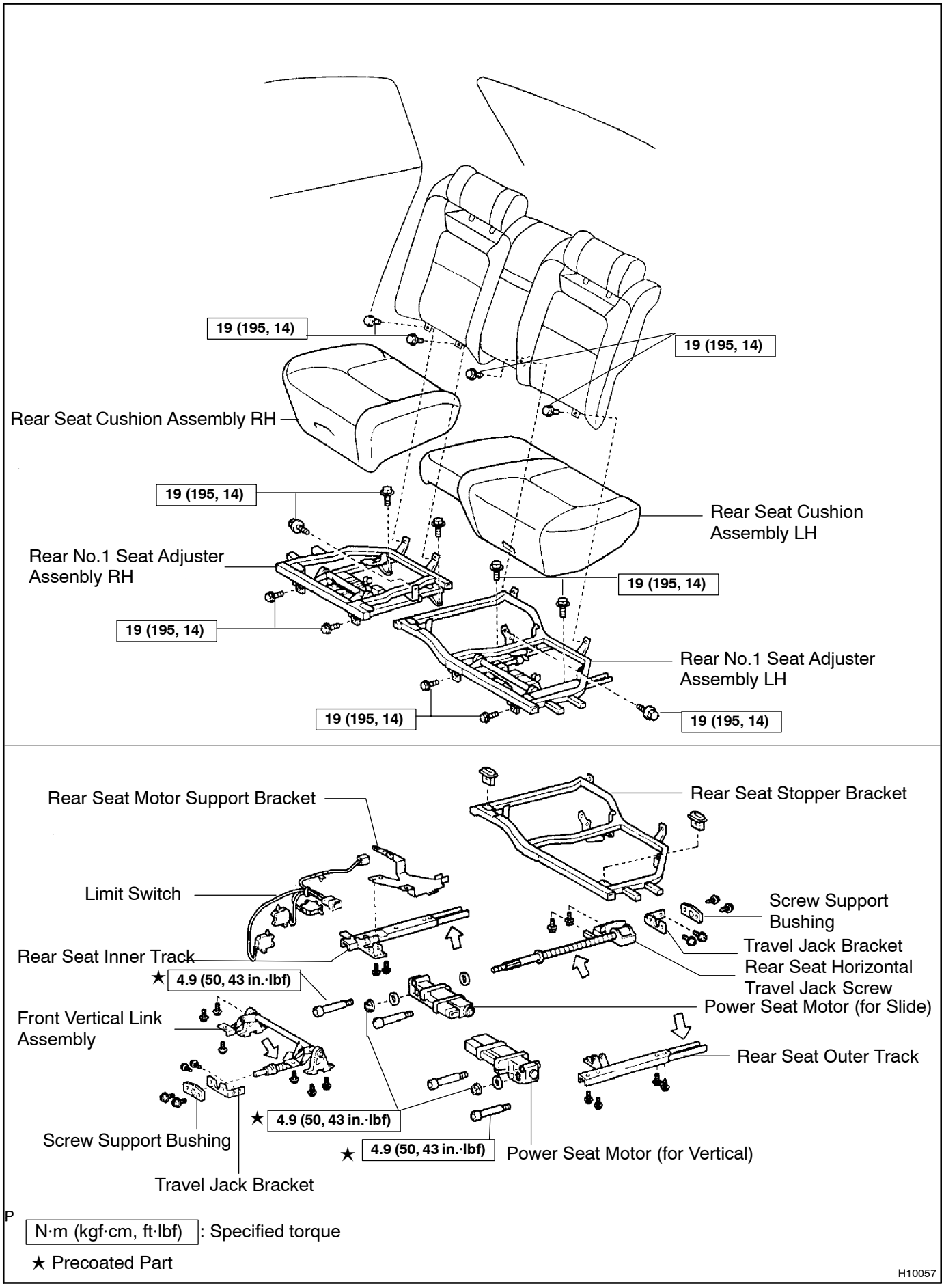
19 (195, 14)
19 (195, 14)
Rear Seat Cushion Assembly RH
19 (195, 14)
Rear Seat Cushion Assembly LH
Rear No.1 Seat Adjuster Assenbly RH
19 (195, 14)
19 (195, 14)
Rear No.1 Seat Adjuster Assembly LH
19 (195, 14)
19 (195, 14)
Rear Seat Motor Support Bracket
Rear Seat Stopper Bracket
Limit Switch
Screw Support Bushing
Travel Jack Bracket
Rear Seat Inner Track
Rear Seat Horizontal Travel Jack Screw
★ 4.9 (50, 43 in.·lbf)
Power Seat Motor (for Slide)
Front Vertical Link Assembly
Rear Seat Outer Track
★ 4.9 (50, 43 in.·lbf)
Screw Support Bushing
★ 4.9 (50, 43 in.·lbf)
Power Seat Motor (for Vertical)
Travel Jack Bracket
N·m (kgf·cm, ft·lbf) : Specified torque
★ Precoated Part
H10057