AC248–01

COMPONENTS

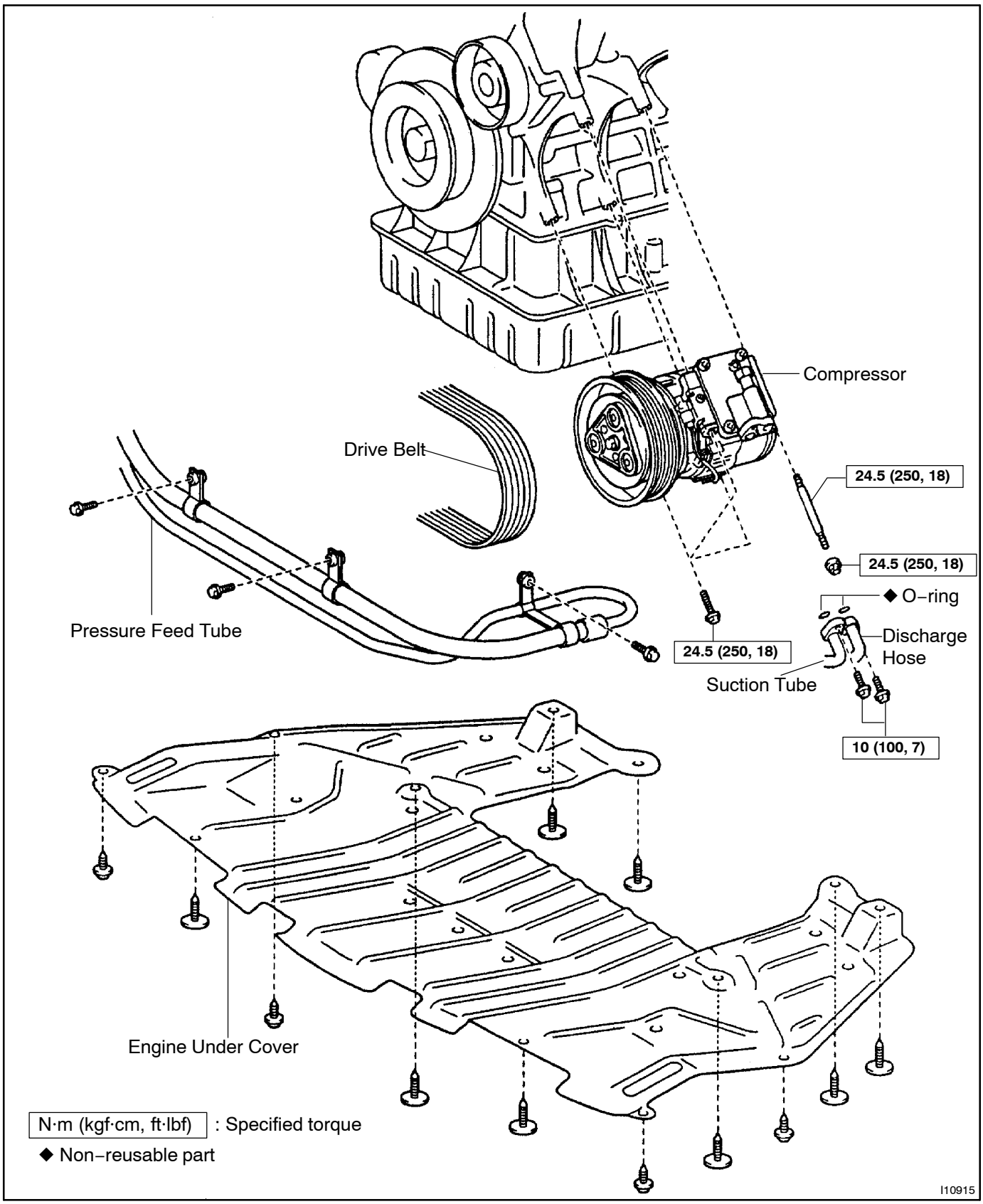

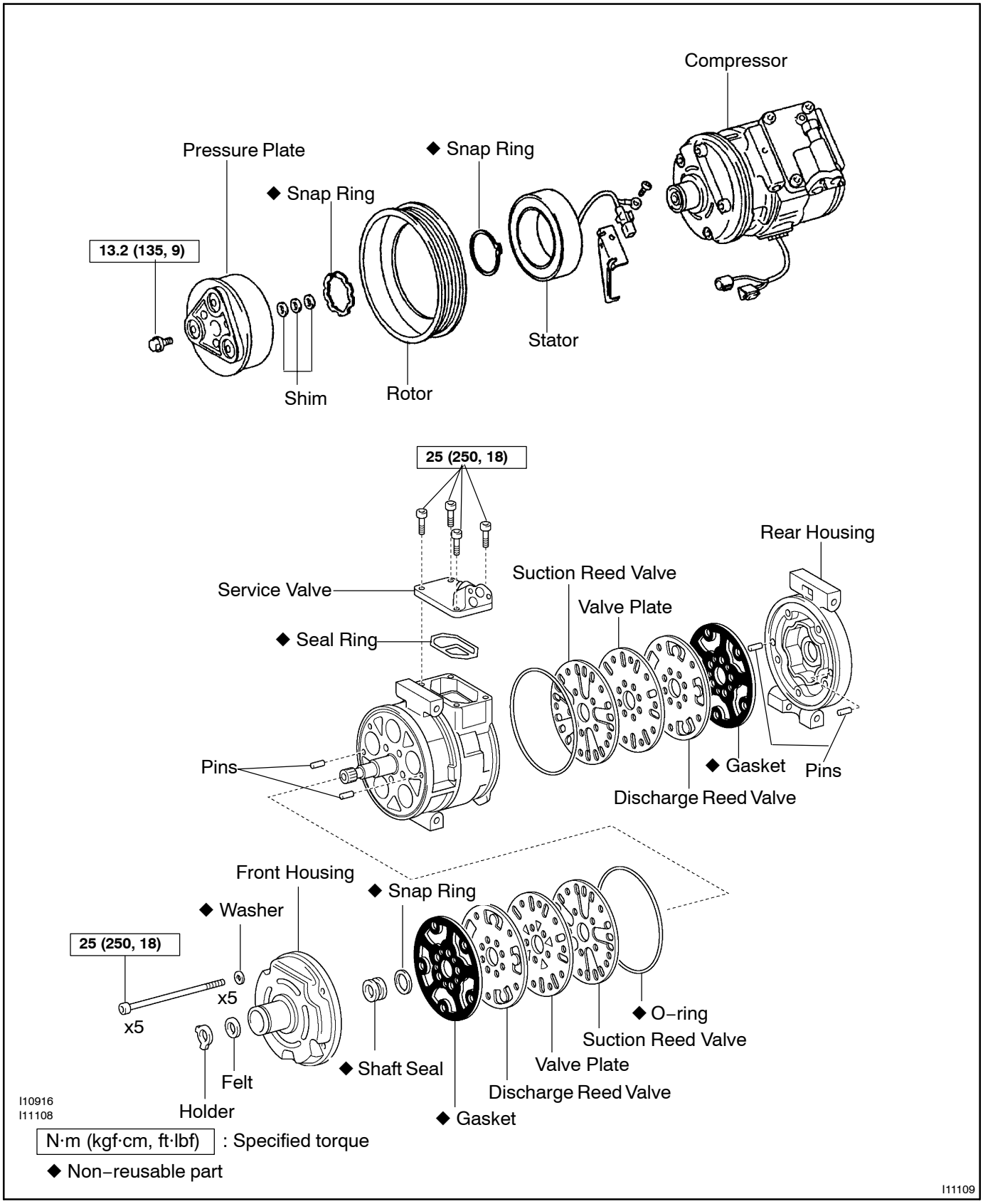
Compressor
Pressure Plate
◆ Snap Ring
◆ Snap Ring
13.2 (135, 9)
Stator
Shim
Rotor
25 (250, 18)
Rear Housing
Suction Reed Valve
Service Valve
Valve Plate
◆ Seal Ring
Pins
◆ Gasket
Pins
Discharge Reed Valve
Front Housing
◆ Snap Ring
◆ Washer
25 (250, 18)
x5
x5
◆ O–ring
Suction Reed Valve
Valve Plate
◆ Shaft Seal
Felt
Discharge Reed Valve
Holder
◆ Gasket
I10916
I11108
N·m (kgf·cm, ft·lbf) : Specified torque
◆ Non–reusable part
I11109