18 TOYOTA CENTURY

(Cont. next page)

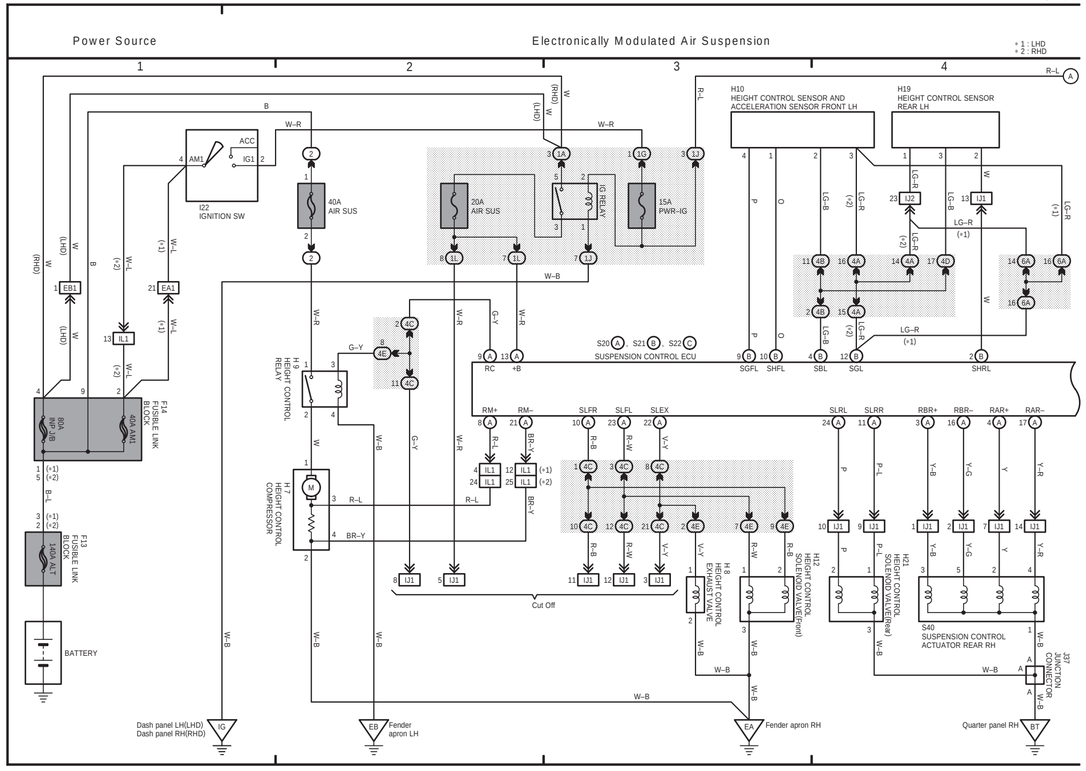
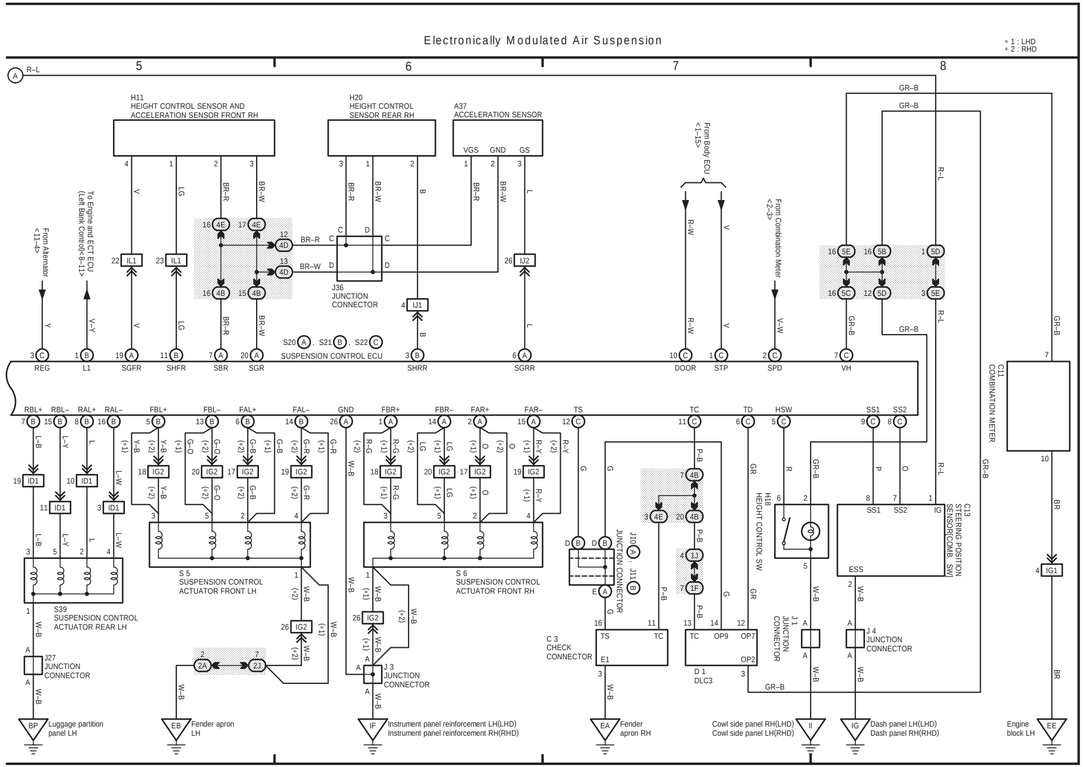
18 TOYOTA CENTURY (Cont' d)