HEADLIGHT

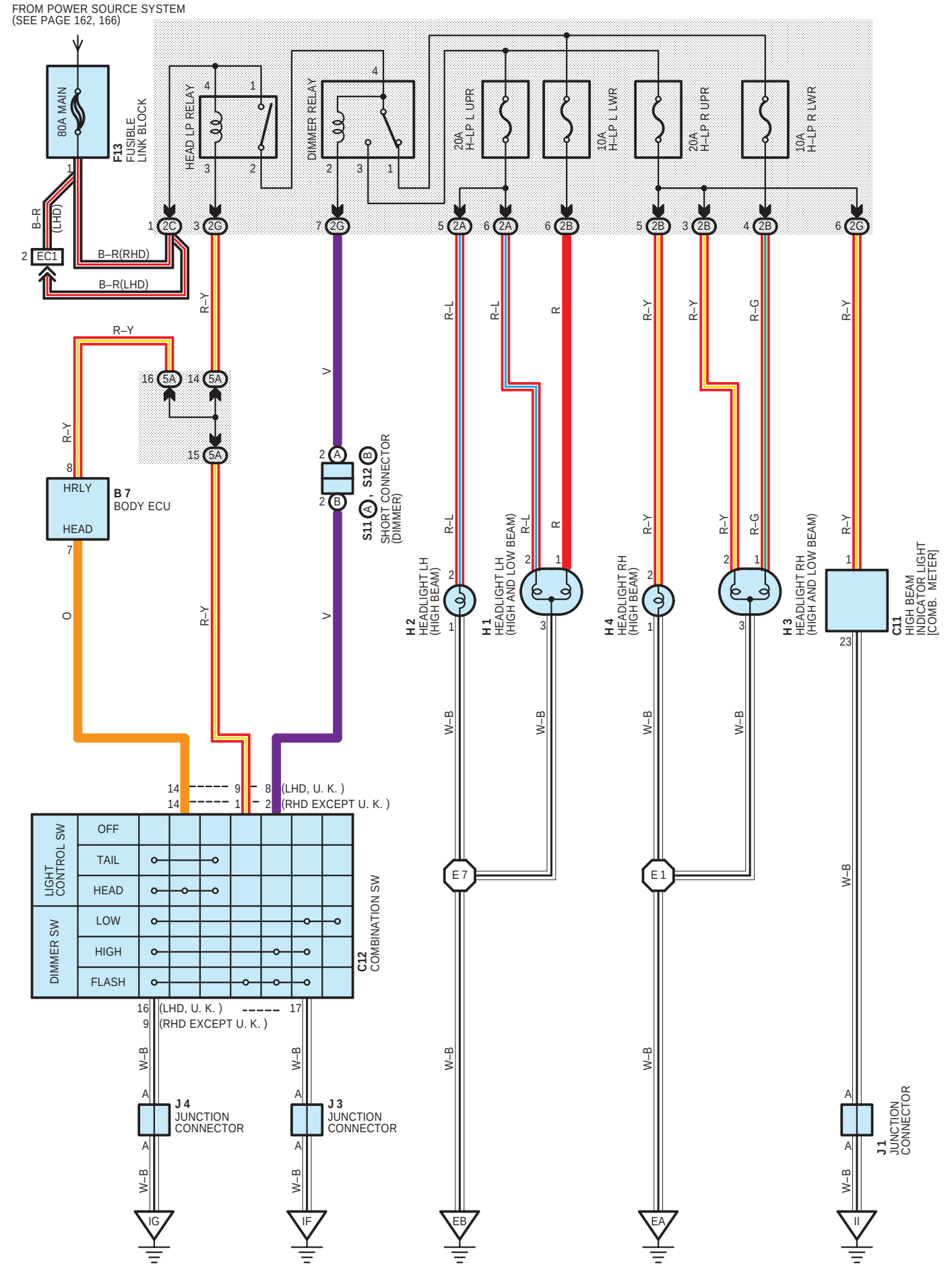
FROM POWER SOURCE SYSTEM
(SEE PAGE 162, 166)
80A MAIN
F13
FUSIBLE LINK BLOCK
HEAD LP RELAY
DIMMER RELAY
20A H-LP L UPR
10A H-LP L LWR
20A H-LP R UPR
10A H-LP R LWR
B-R
(LHD)
EC1
B-R(RHD)
B-R(LHD)
R-Y
V
R-L
R
R-G
HRLY
HEAD
B 7
BODY ECU
O
S11 A , S12 B
SHORT CONNECTOR (DIMMER)
H 2
HEADLIGHT LH (HIGH BEAM)
H 1
HEADLIGHT LH (HIGH AND LOW BEAM)
H 4
HEADLIGHT RH (HIGH BEAM)
H 3
HEADLIGHT RH (HIGH AND LOW BEAM)
C11
HIGH BEAM INDICATOR LIGHT [COMB. METER]
(LHD, U. K.)
(RHD EXCEPT U. K.)
LIGHT CONTROL SW
OFF
TAIL
HEAD
DIMMER SW
LOW
HIGH
FLASH
C12
COMBINATION SW
W-B
E 7
E 1
J 4
JUNCTION CONNECTOR
J 3
JUNCTION CONNECTOR
J 1
JUNCTION CONNECTOR
IG
IF
EB
EA
II