TIMING CHAIN

COMPONENTS

EM10L–02

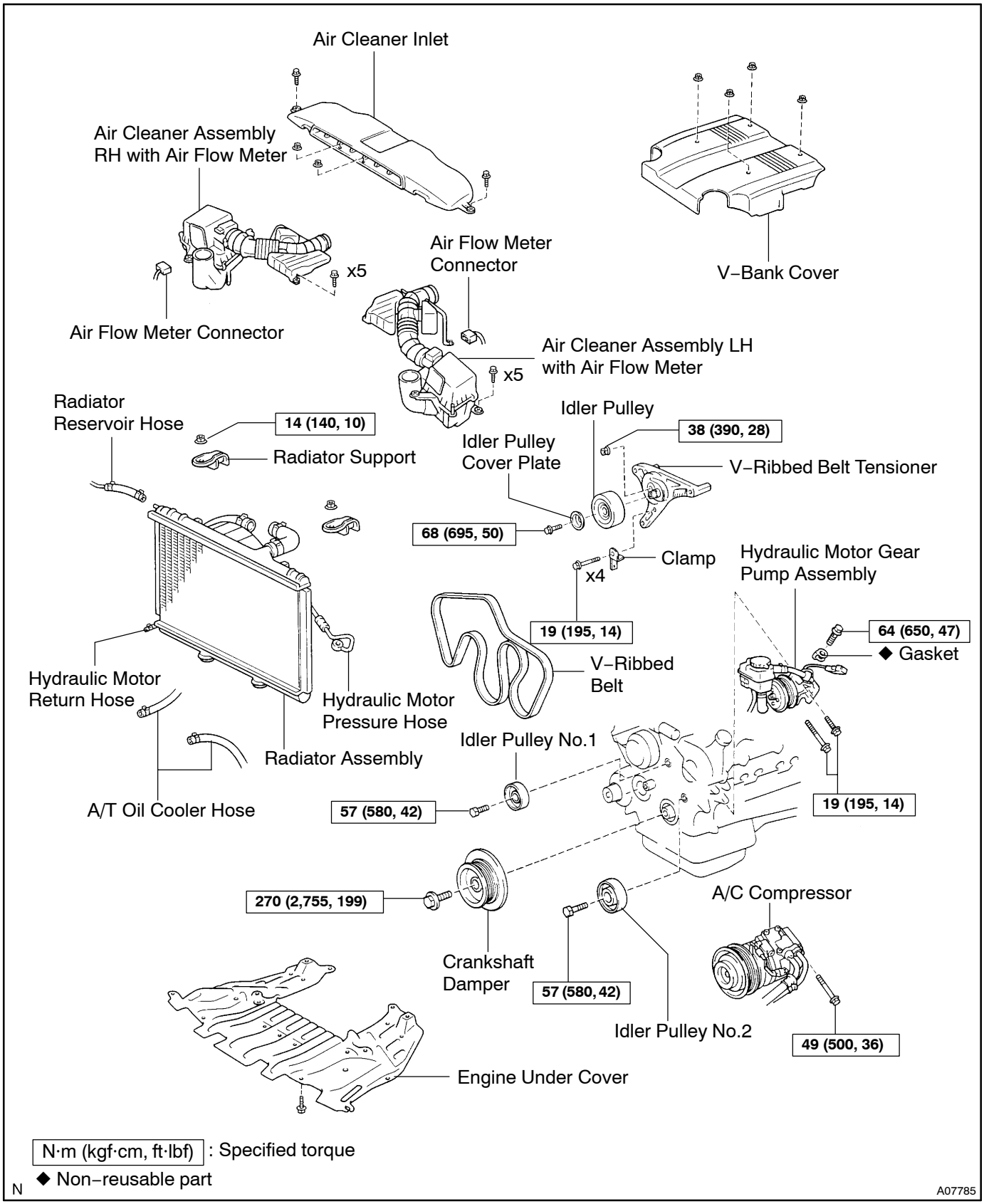

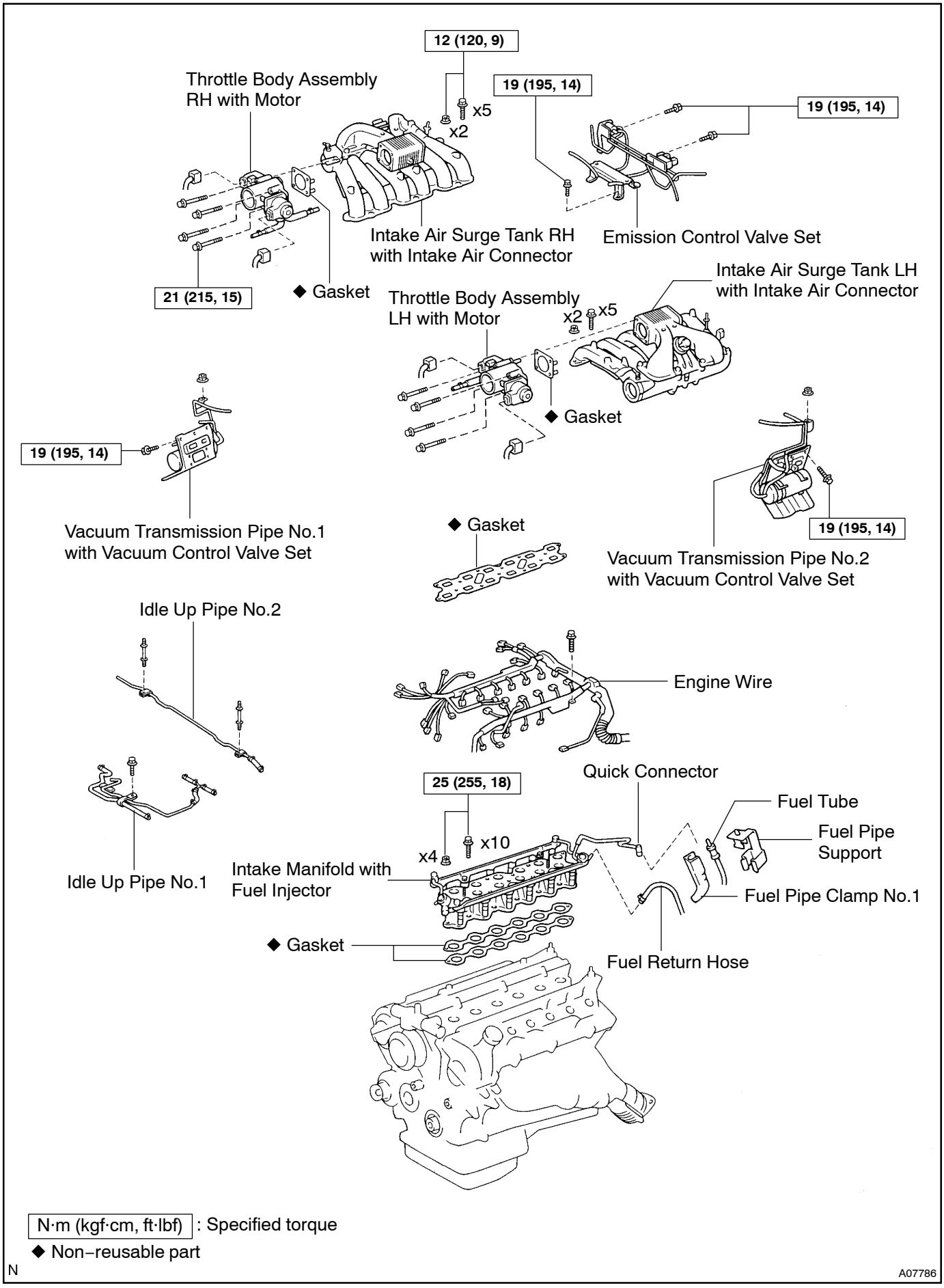
12 (120, 9)
Throttle Body Assembly
RH with Motor
19 (195, 14)
x5
x2
19 (195, 14)
Intake Air Surge Tank RH
with Intake Air Connector
Emission Control Valve Set
21 (215, 15)
◆ Gasket
Throttle Body Assembly
LH with Motor
Intake Air Surge Tank LH
with Intake Air Connector
x2
x5
◆ Gasket
19 (195, 14)
Vacuum Transmission Pipe No.1
with Vacuum Control Valve Set
◆ Gasket
19 (195, 14)
Vacuum Transmission Pipe No.2
with Vacuum Control Valve Set
Idle Up Pipe No.2
Engine Wire
Idle Up Pipe No.1
25 (255, 18)
Quick Connector
Fuel Tube
Fuel Pipe
Support
x4
x10
Intake Manifold with
Fuel Injector
Fuel Pipe Clamp No.1
◆ Gasket
Fuel Return Hose
N·m (kgf·cm, ft·lbf) : Specified torque
◆ Non–reusable part
N
A07786

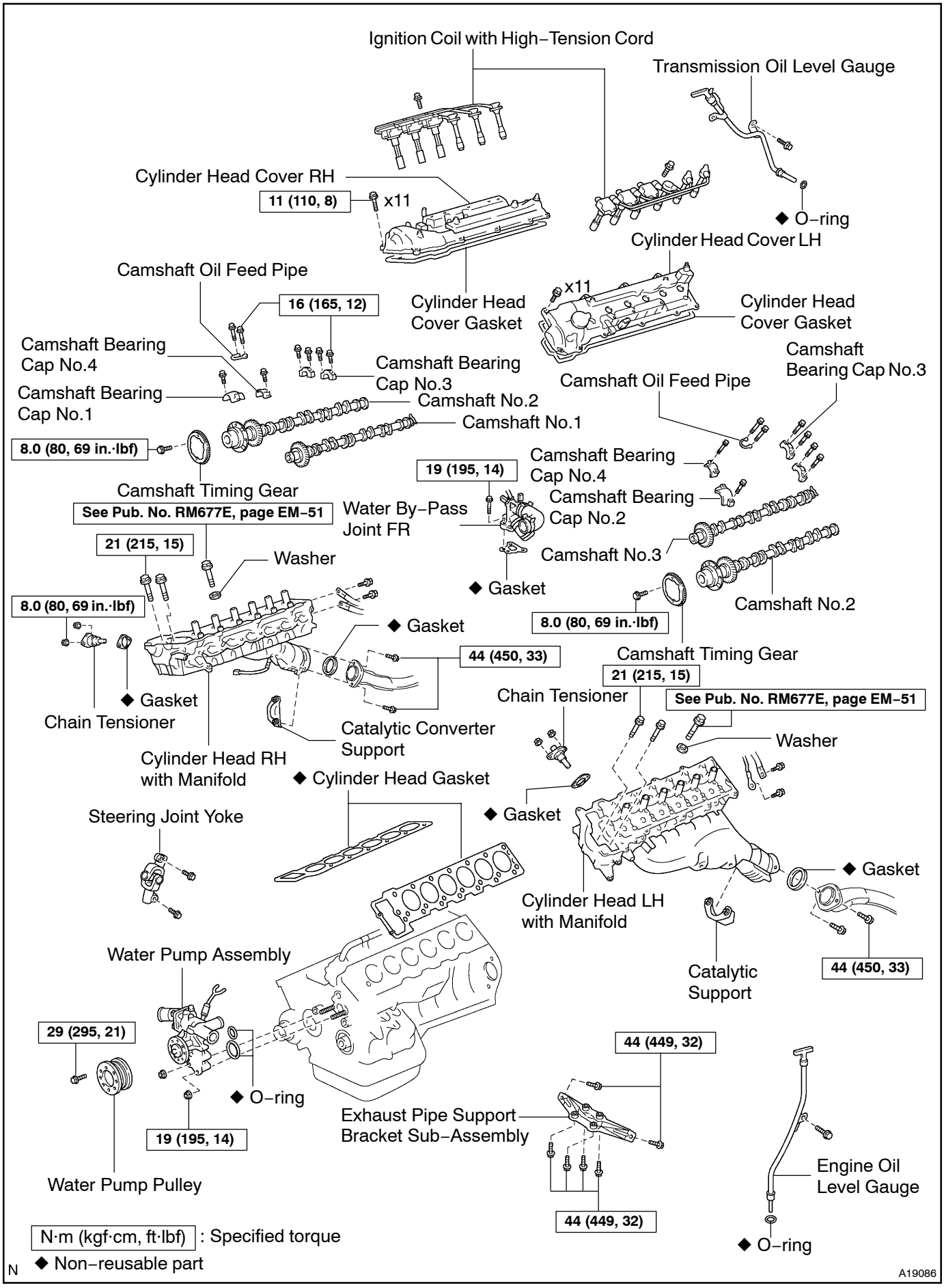
Ignition Coil with High–Tension Cord
Transmission Oil Level Gauge
Cylinder Head Cover RH
11 (110, 8)
x11
◆ O–ring
Cylinder Head Cover LH
Camshaft Oil Feed Pipe
16 (165, 12)
Cylinder Head Cover Gasket
x11
Cylinder Head Cover Gasket
Camshaft Bearing Cap No.4
Camshaft Bearing Cap No.3
Camshaft Bearing Cap No.3
Camshaft Oil Feed Pipe
Camshaft Bearing Cap No.1
Camshaft No.2
Camshaft No.1
8.0 (80, 69 in.·lbf)
Camshaft Bearing Cap No.4
19 (195, 14)
Camshaft Timing Gear
Camshaft Bearing Cap No.2
See Pub. No. RM677E, page EM–51
Water By–Pass Joint FR
21 (215, 15)
Washer
Camshaft No.3
◆ Gasket
8.0 (80, 69 in.·lbf)
Camshaft No.2
◆ Gasket
8.0 (80, 69 in.·lbf)
44 (450, 33)
Camshaft Timing Gear
21 (215, 15)
◆ Gasket
Chain Tensioner
See Pub. No. RM677E, page EM–51
Chain Tensioner
Catalytic Converter Support
Washer
Cylinder Head RH with Manifold
◆ Cylinder Head Gasket
◆ Gasket
Steering Joint Yoke
◆ Gasket
Cylinder Head LH with Manifold
Water Pump Assembly
Catalytic Support
44 (450, 33)
29 (295, 21)
44 (449, 32)
◆ O–ring
Exhaust Pipe Support Bracket Sub–Assembly
19 (195, 14)
Engine Oil Level Gauge
Water Pump Pulley
44 (449, 32)
N·m (kgf·cm, ft·lbf) : Specified torque
◆ O–ring
◆ Non–reusable part
N
A19086

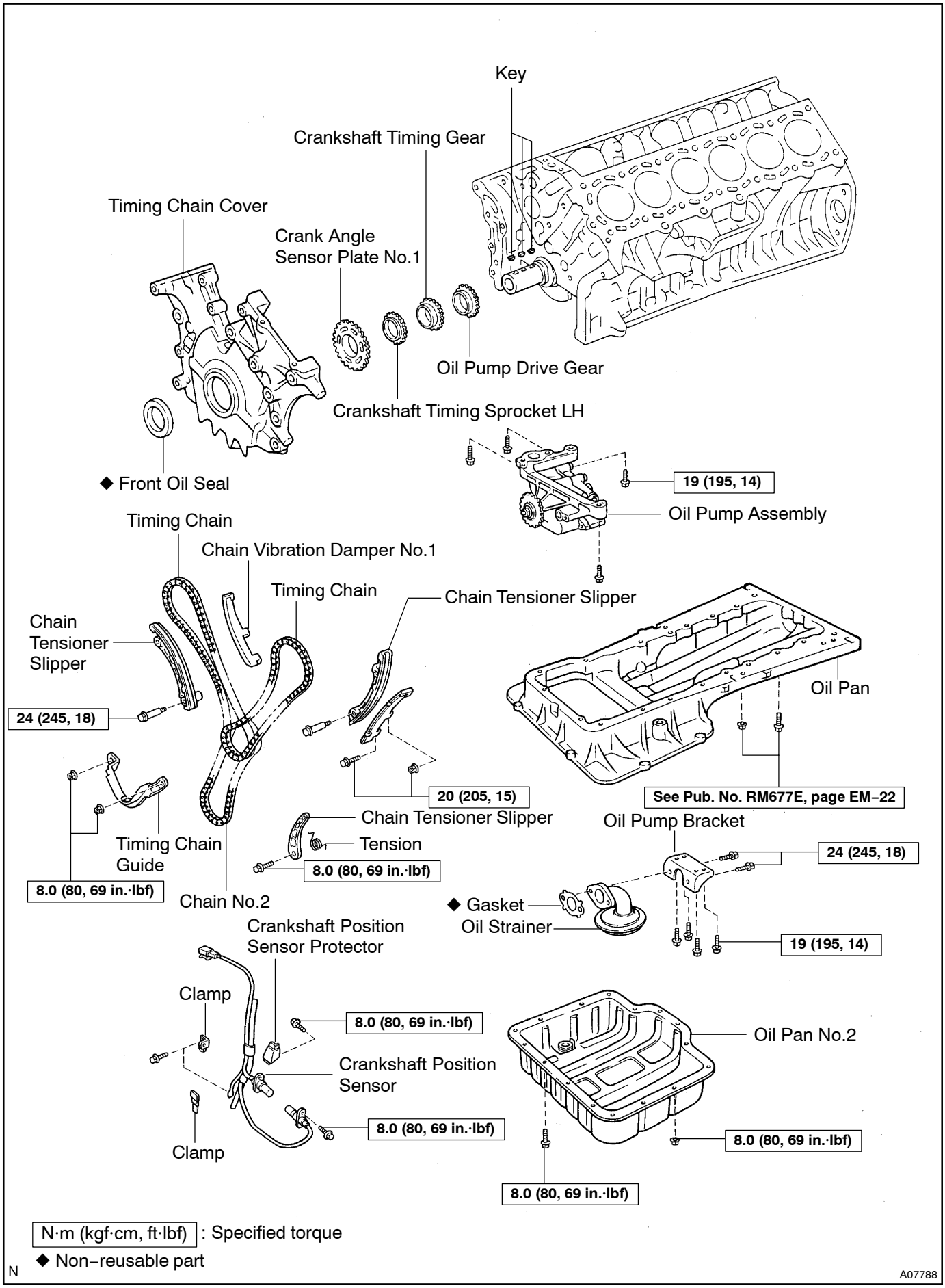
Key
Crankshaft Timing Gear
Timing Chain Cover
Crank Angle
Sensor Plate No.1
Oil Pump Drive Gear
Crankshaft Timing Sprocket LH
◆ Front Oil Seal
19 (195, 14)
Oil Pump Assembly
Timing Chain
Chain Vibration Damper No.1
Timing Chain
Chain Tensioner Slipper
Chain
Tensioner
Slipper
24 (245, 18)
Oil Pan
20 (205, 15)
See Pub. No. RM677E, page EM–22
Chain Tensioner Slipper
Oil Pump Bracket
Tension
Timing Chain
Guide
8.0 (80, 69 in.·lbf)
24 (245, 18)
8.0 (80, 69 in.·lbf)
Chain No.2
◆ Gasket
Oil Strainer
Crankshaft Position
Sensor Protector
19 (195, 14)
Clamp
8.0 (80, 69 in.·lbf)
Oil Pan No.2
Crankshaft Position
Sensor
8.0 (80, 69 in.·lbf)
Clamp
8.0 (80, 69 in.·lbf)
8.0 (80, 69 in.·lbf)
N·m (kgf·cm, ft·lbf) : Specified torque
◆ Non–reusable part
N
A07788