WIRELESS DOOR LOCK CONTROL (LHD)

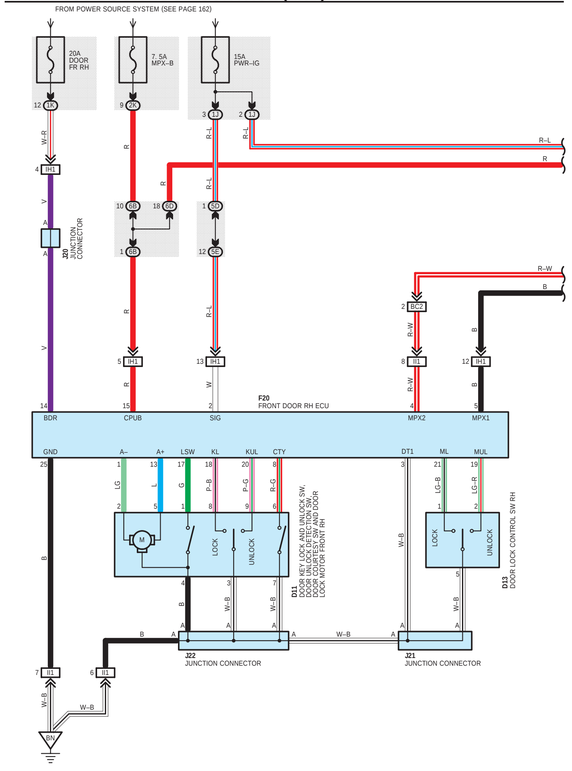

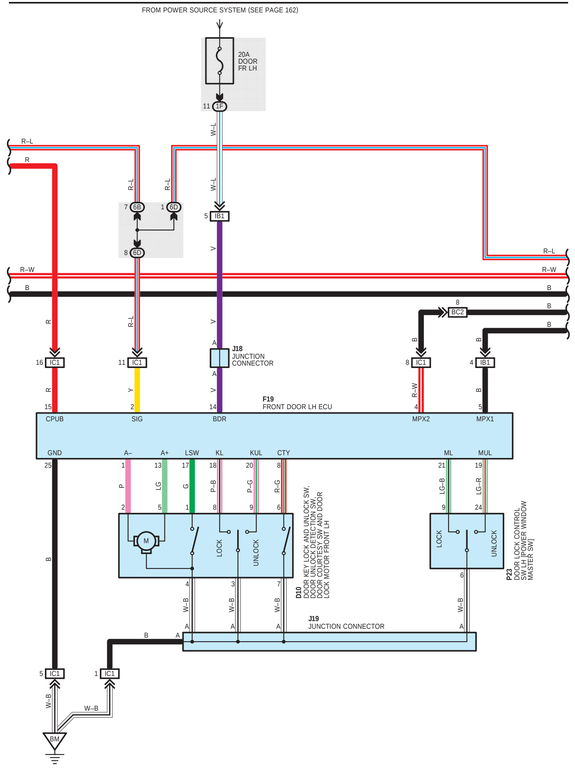
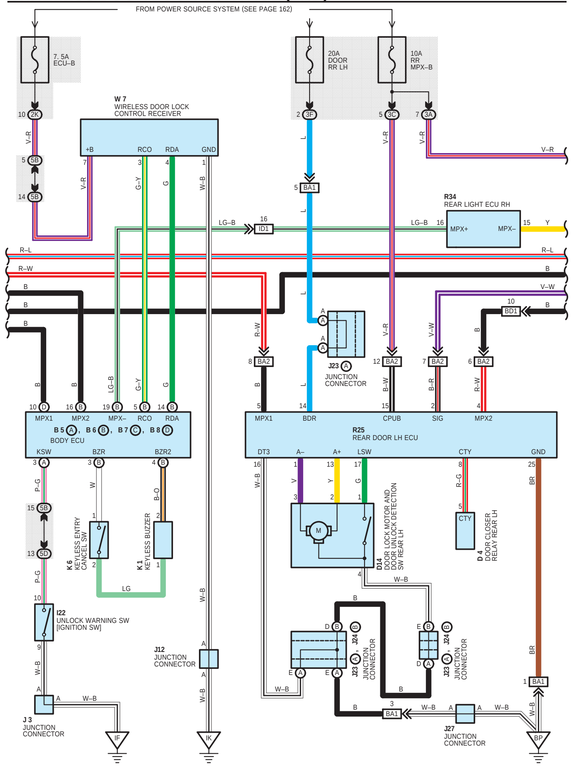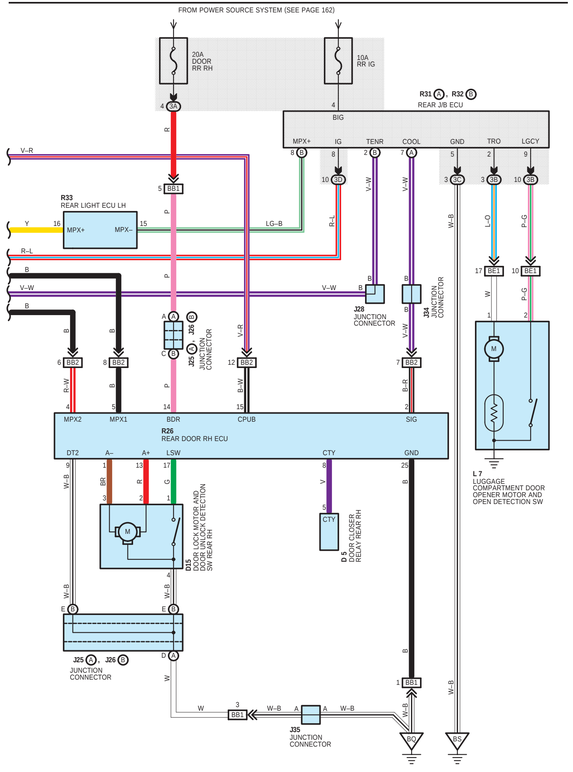
WIRELESS DOOR LOCK CONTROL (LHD)