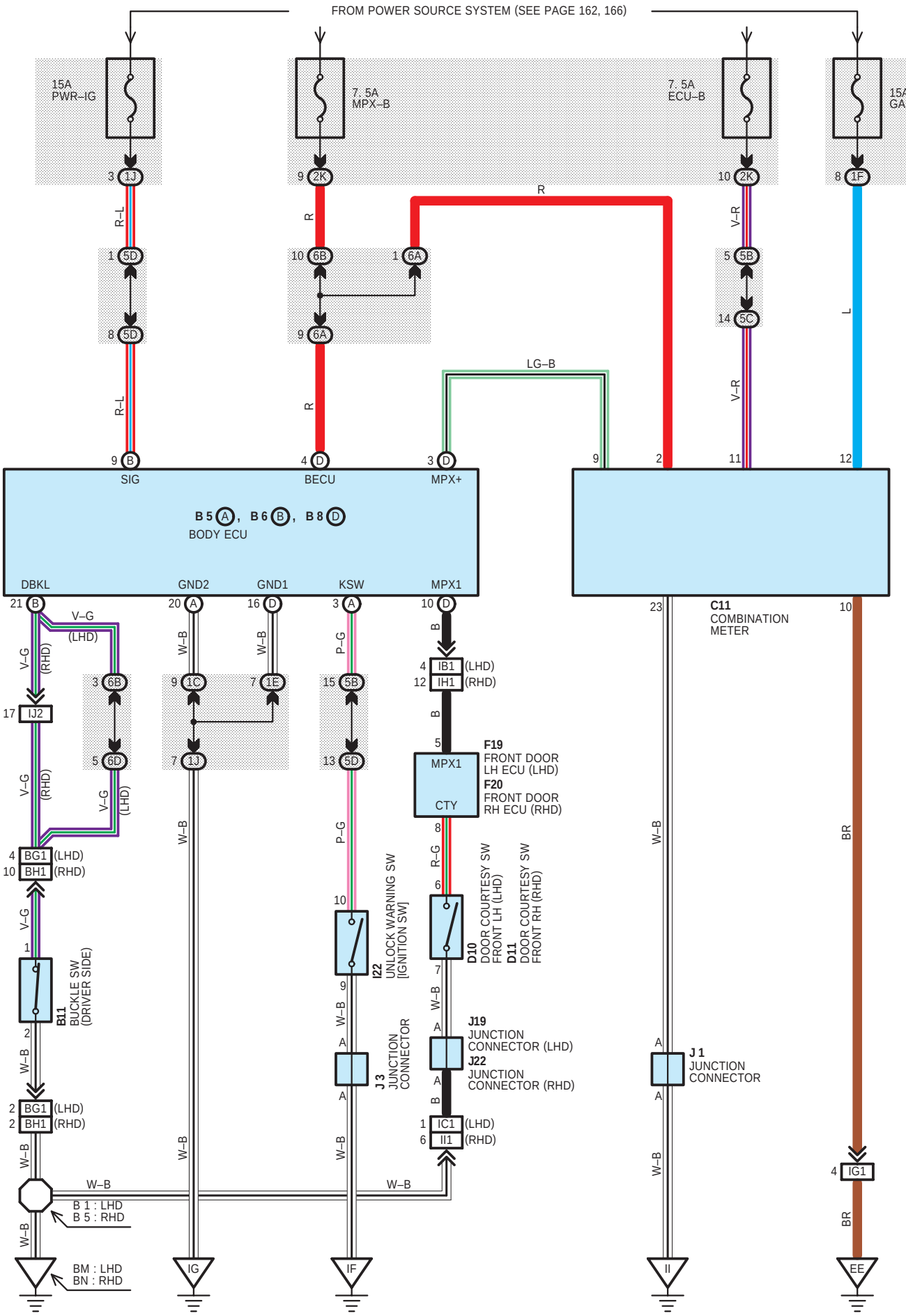KEY REMINDER AND SEAT BELT WARNING