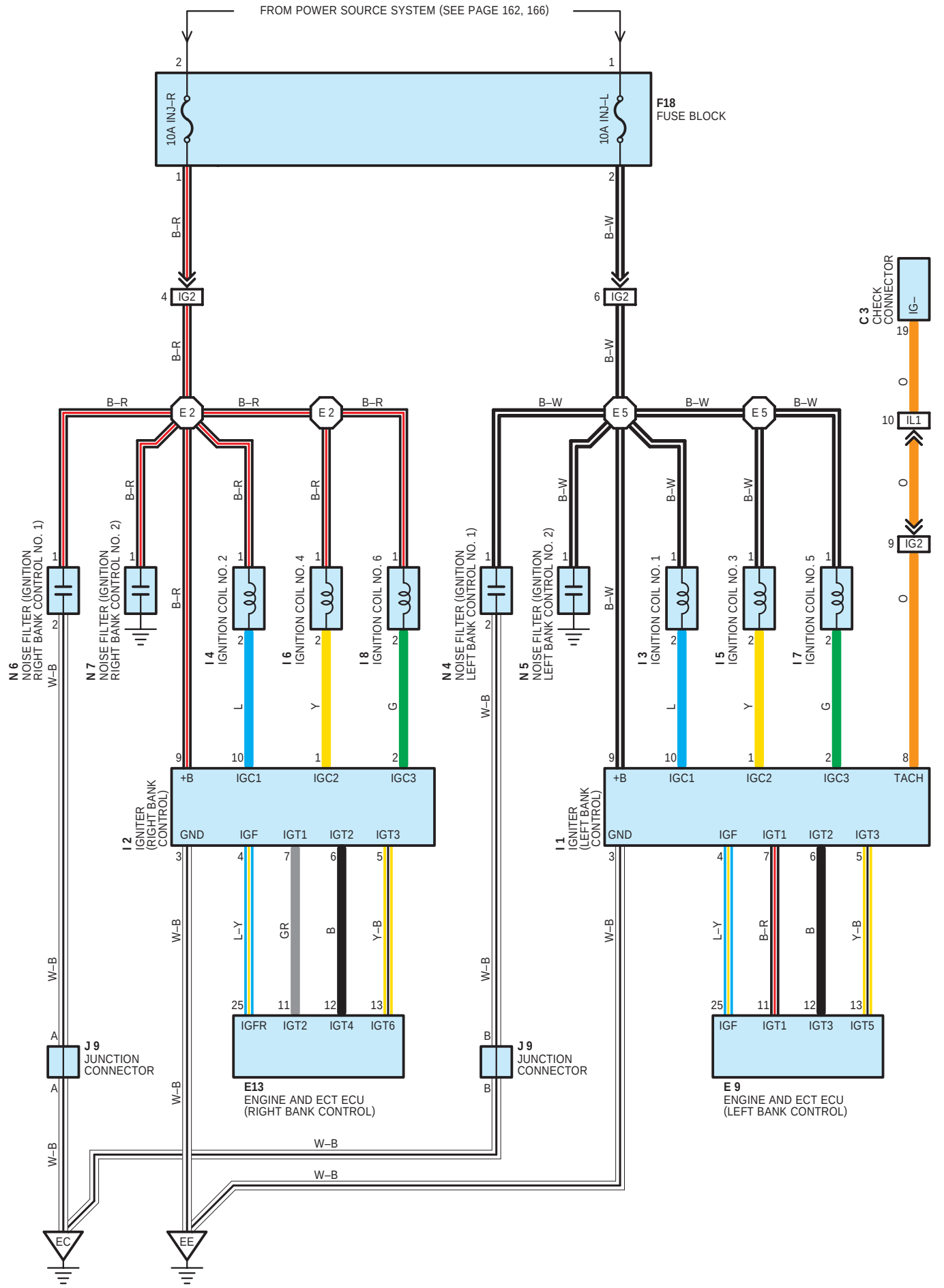
FROM POWER SOURCE SYSTEM (SEE PAGE 162, 166)
F18
FUSE BLOCK
10A INJ–R
10A INJ–L
IG2
E 2
E 5
C 3
CHECK
CONNECTOR
IG–
IL1
N 6
NOISE FILTER (IGNITION
RIGHT BANK CONTROL NO. 1)
N 7
NOISE FILTER (IGNITION
RIGHT BANK CONTROL NO. 2)
N 4
NOISE FILTER (IGNITION
LEFT BANK CONTROL NO. 1)
N 5
NOISE FILTER (IGNITION
LEFT BANK CONTROL NO. 2)
I 4
IGNITION COIL NO. 2
I 6
IGNITION COIL NO. 4
I 8
IGNITION COIL NO. 6
I 3
IGNITION COIL NO. 1
I 5
IGNITION COIL NO. 3
I 7
IGNITION COIL NO. 5
I 2
IGNITER
(RIGHT BANK
CONTROL)
I 1
IGNITER
(LEFT BANK
CONTROL)
+B
IGC1
IGC2
IGC3
TACH
GND
IGF
IGT1
IGT2
IGT3
IGFR
IGT4
IGT6
IGT5
J 9
JUNCTION
CONNECTOR
E13
ENGINE AND ECT ECU
(RIGHT BANK CONTROL)
E 9
ENGINE AND ECT ECU
(LEFT BANK CONTROL)
EC
EE