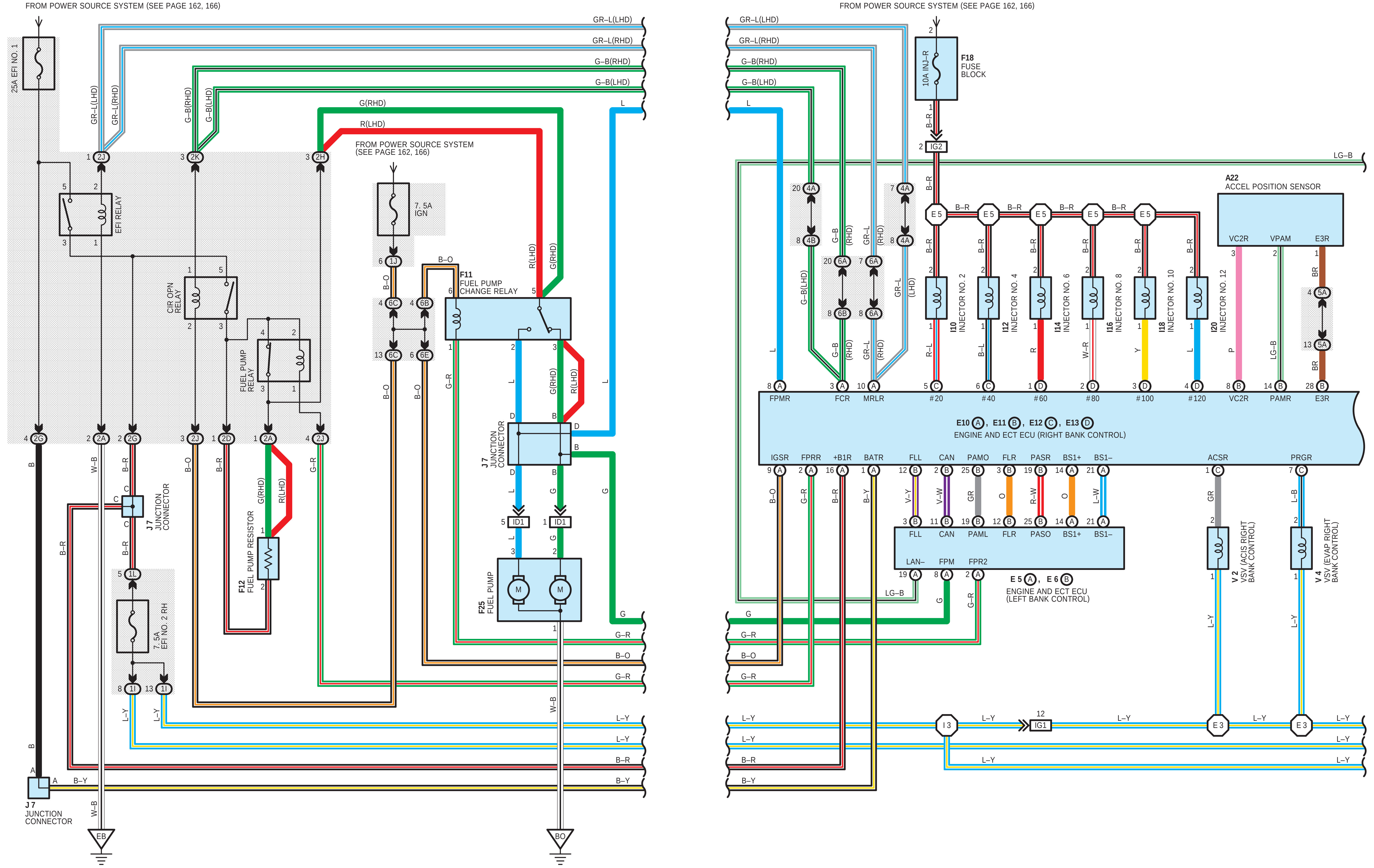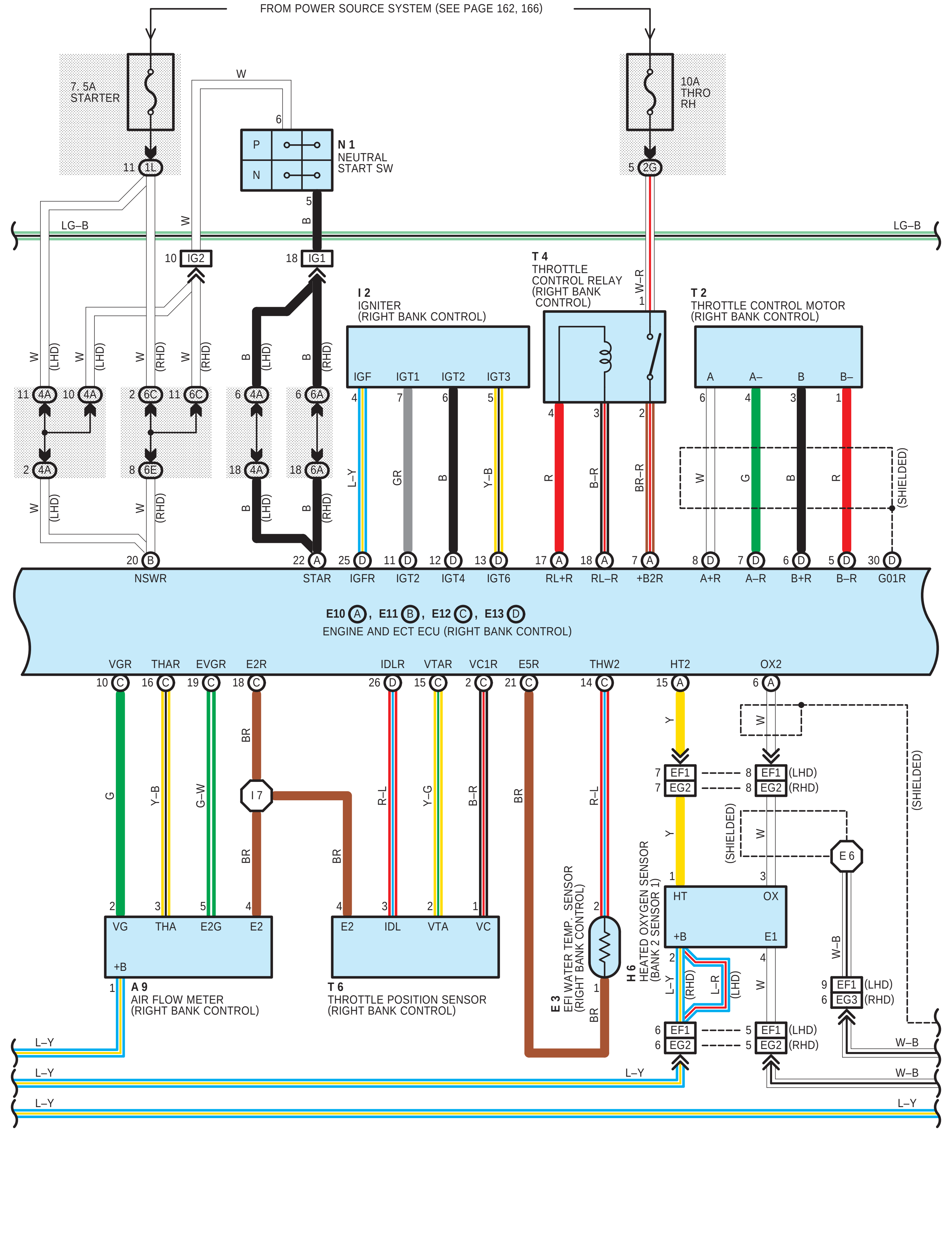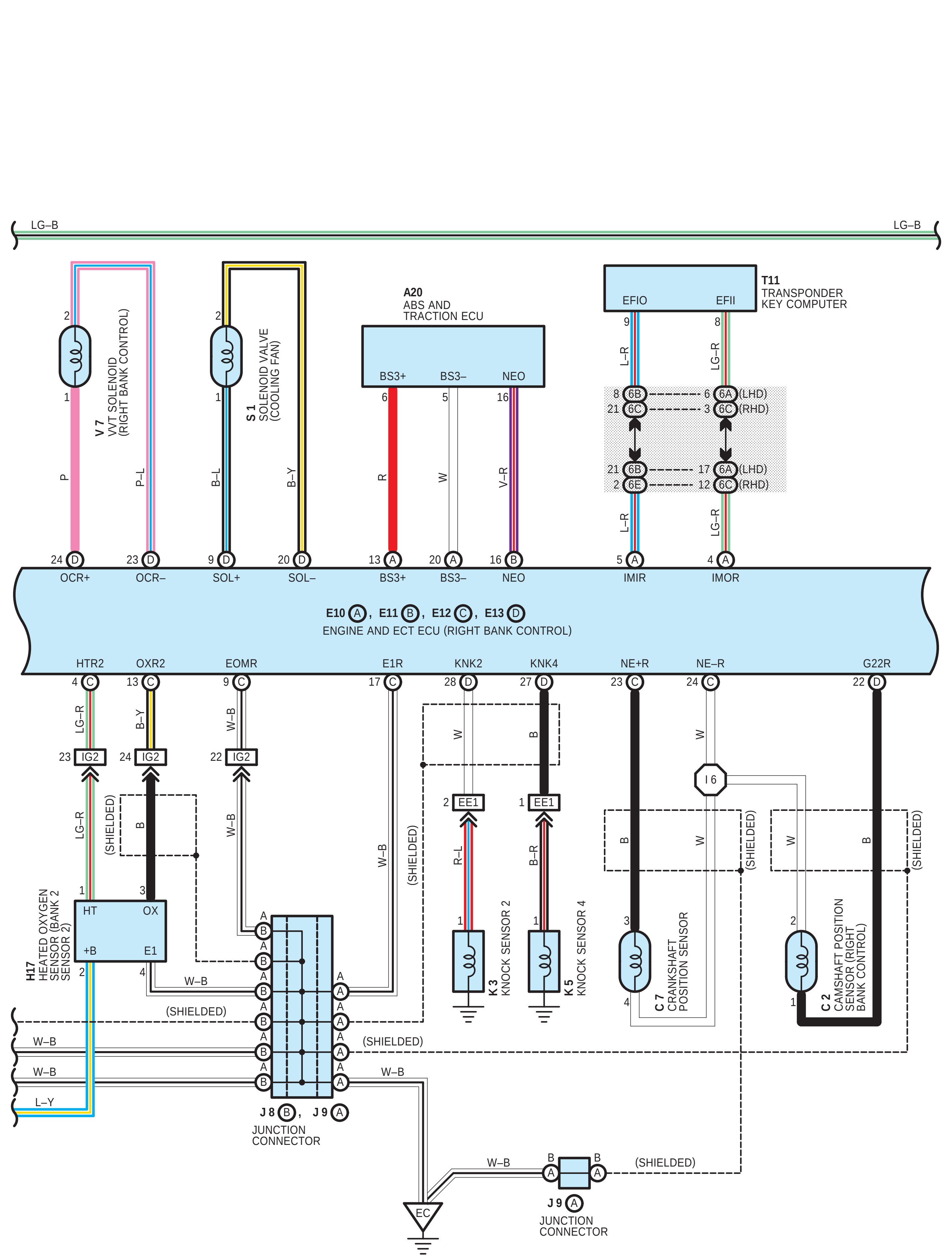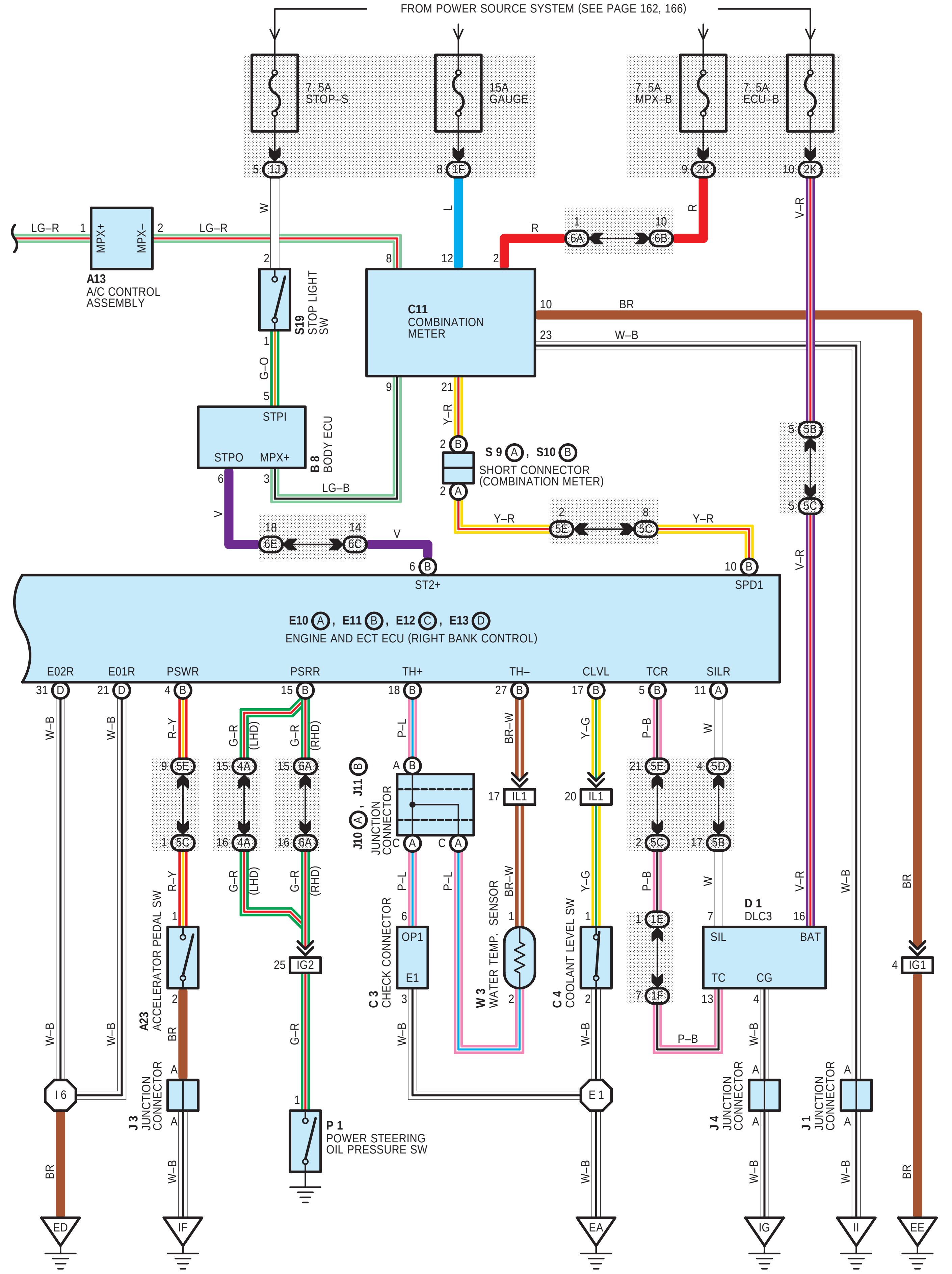ENGINE CONTROL (RIGHT BANK CONTROL)