REAR PNEUMATIC CYLINDER

COMPONENTS

SA1I2–01

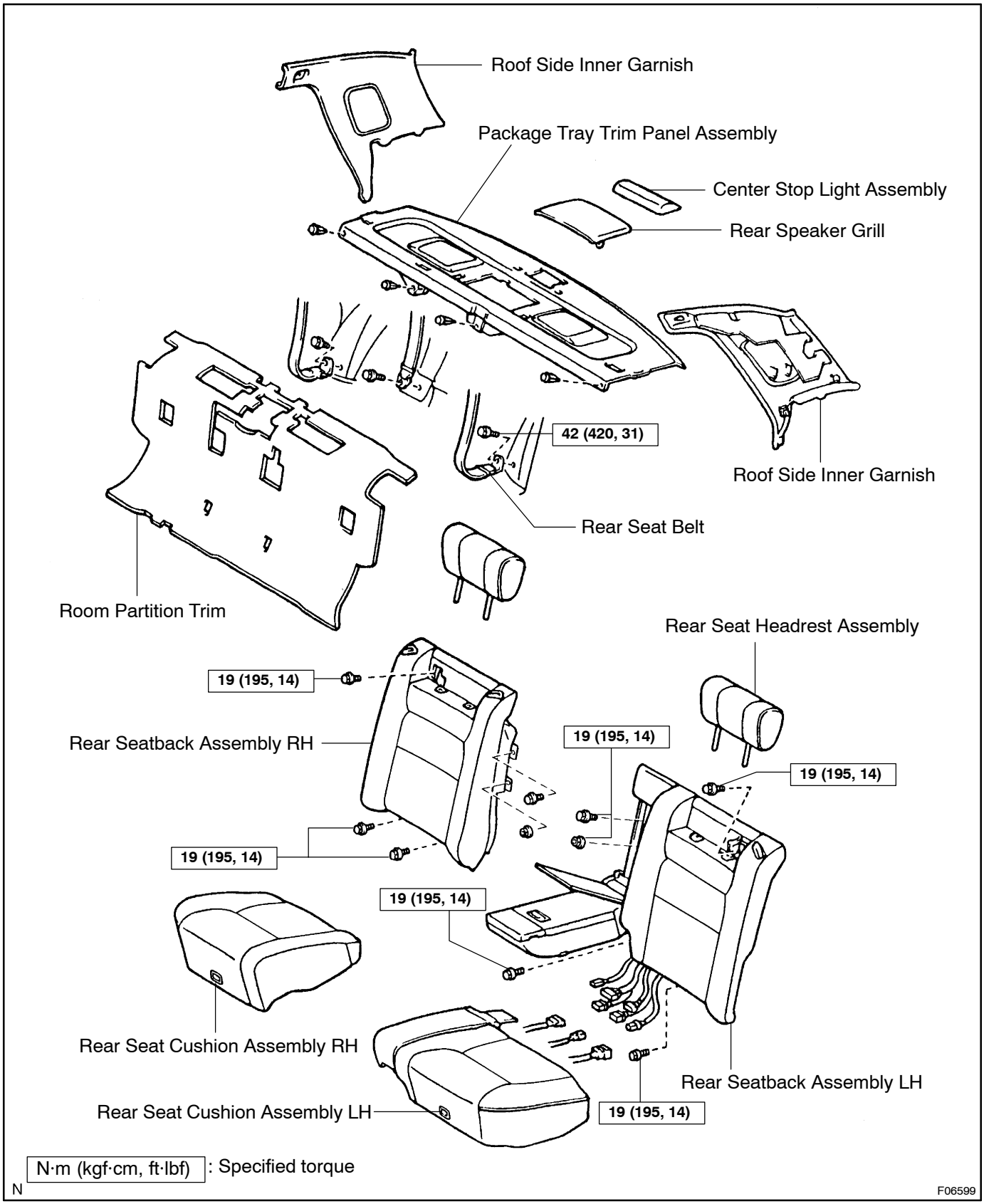

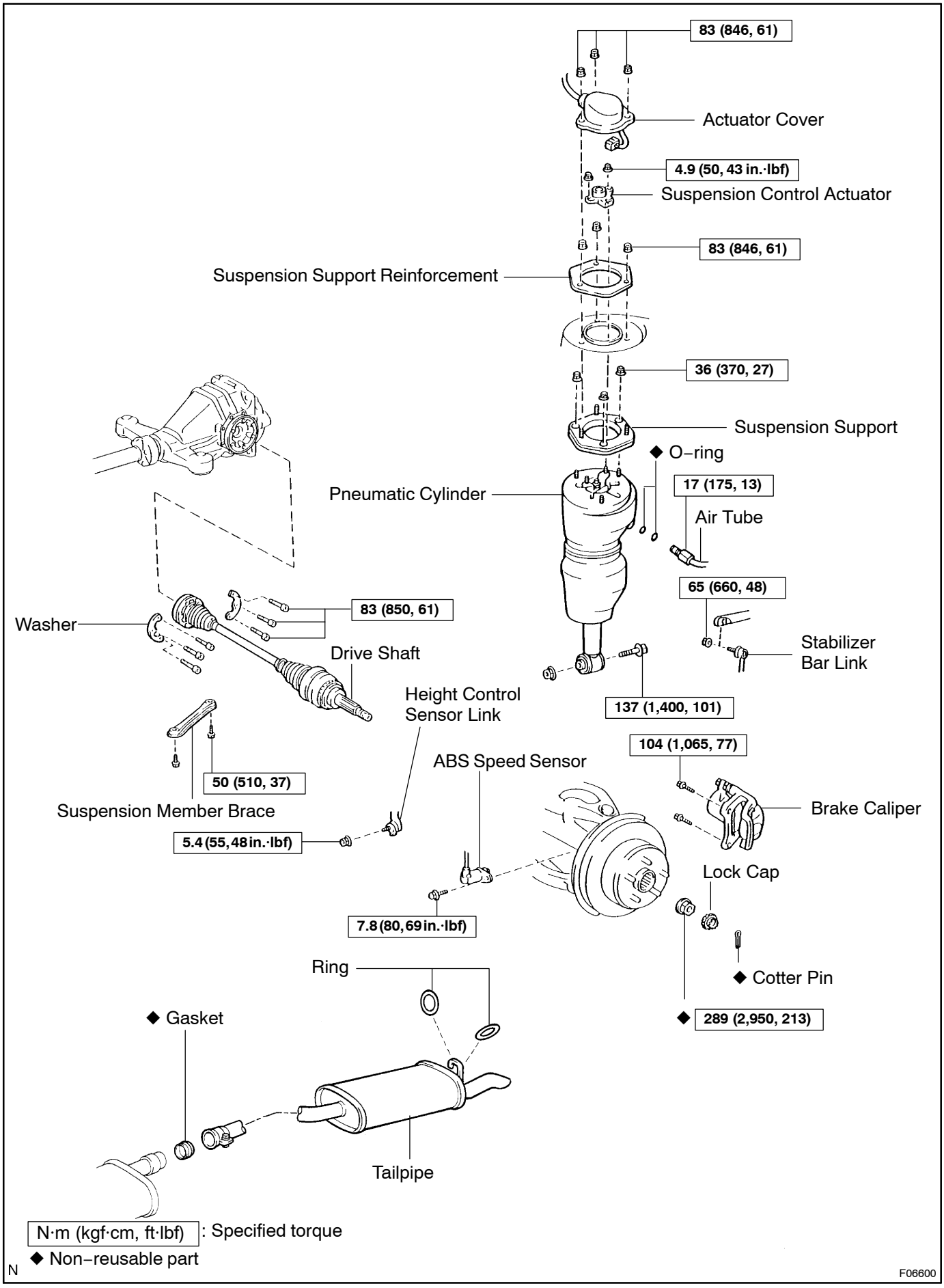
83 (846, 61)
Actuator Cover
4.9 (50, 43 in.·lbf)
Suspension Control Actuator
83 (846, 61)
Suspension Support Reinforcement
36 (370, 27)
Suspension Support
◆ O–ring
Pneumatic Cylinder
17 (175, 13)
Air Tube
65 (660, 48)
Stabilizer Bar Link
Washer
83 (850, 61)
Drive Shaft
137 (1,400, 101)
Height Control Sensor Link
104 (1,065, 77)
ABS Speed Sensor
50 (510, 37)
Suspension Member Brace
Brake Caliper
5.4 (55, 48 in.·lbf)
Lock Cap
7.8 (80, 69 in.·lbf)
Ring
◆ Cotter Pin
◆ Gasket
◆ 289 (2,950, 213)
Tailpipe
N·m (kgf·cm, ft·lbf) : Specified torque
◆ Non–reusable part
N
F06600